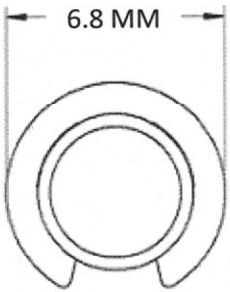

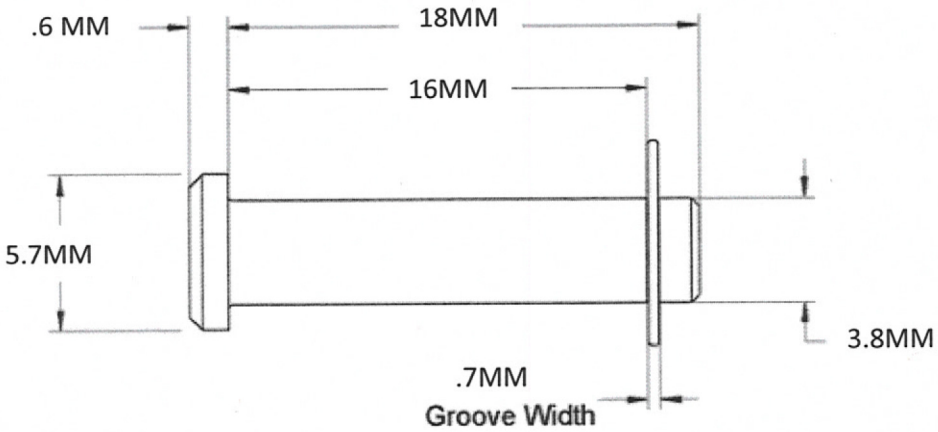

Part# ADDA-1027
Description: Flange Pin and E-Clip
Material: Low Carbon Steel
Finish: Black Zinc